THE INTERNATIONAL JOURNAL OF BUSINESS & MANAGEMENT

Intellectual Capital and Sustainable Competitive Advantage of Deposit Money Banks in South-South Nigeria

Omoankhhanlen, Joseph Akhigbe
Senior Lecturer, Department of Management, University of Port Harcourt, Nigeria
Okocha, B. Friday
Doctoral Candidate, Department of Management, University of Port Harcourt, Nigeria

Abstract:
The study investigated the relationship between Intellectual Capital and Sustainable Competitive Advantage. The population for the study consists of 819Managers, particularly Branch, Operations and Customer Relationship Managers of Tier One Deposit Money Banks in South-South, Nigeria. Exploratory Factor Analysis (EFA) was used to validate the instrument, and preliminary analysis was performed to check normality, linearity and equality of variance. Using the Krejcie and Morgan's sample size determination formula, copies of questionnaire were administered to a sample size of 262managers. Data obtained from 250 retrieved and usable copies of the questionnaire were analyzed by means of the Statistical Package for Social Science (SPSS) version 20.0 and Analysis and Moments of Structures (AMOS) version 24.0. The results revealed that human, relational and structural capital have positive significant relationship with organizational responsiveness. The study recommended that standards should be created for human resources identification and measurement. This will enhance valuation of human capital, ensure a higher degree of utility to stakeholders and show a reliable comparison of human capital values.

Keywords: *Intellectual capital, human capital, organizational responsiveness, relational capital, structural capital, sustainable competitive advantage, deposit money banks*

1. Introduction

Porter (1985) was the first to use the term "competitive advantage" in the strategy discipline's vocabulary. Another of the strategy "buzzwords" that confuse academics, business executives, and consultants is the term "competitive advantage."(Markides& Wang, 2000).

Organizations must compete in a diverse and demanding market world in the twenty-first century, which is being changed by many factors such as globalization, periodic and unpredictable shifts, and the growing use of information technology(Denisi, Hitt&Jacckson, 2003). As a result, gaining a strategic edge is a top priority for senior executives in today's competitive and slow-growth markets. For the past two decades, academics and practitioners have been concerned about the origins of competitive advantage(Henderson, 1983; Porter, 1985; Coyne, 1986; Prahalad& Hamel, 1990; Grant, 1991; Peteraf, 1993).

According to Montgomery and Porter (2009) cited in Vinayan, Jayashree and Marthandan (2012),The capacity of an organization to react appropriately to mitigate negative threats or capitalize on positive opportunities created by its environment is known as organizational responsiveness. As a primary determinant of firm success, it is also the capacity of organizations to react rapidly to changes in their external climate (Kuratko, Goodale& Hornsby, 2001).Organizational responsiveness enables businesses to identify market trends rapidly, reconfigure processes to meet emerging market demands, exchange information across organizational boundaries, maximize the value of information management systems, and implement new product and process technology ahead of the competition. Due to turbulent nature of today's business environments, most firms have to deal simultaneously with the "here and now" and the future, and they must nowbe capable of combining routine behaviour with improvisation (Winter, 2003).

Human capital, according to Ogujiuba (2013), is critical to a nation's socioeconomic development and involves education, health, labor and jobs, and women's issues. Investing in human capital is therefore important because it aims to ensure that the nation's human resource endowment is competent, qualified, active, and safe, allowing for the most efficient exploitation and use of other resources to promote growth and development. Relational resources, according to Rodriguez-Castellanos, Garcia-Merino, and Garcia-Zambrano (2010), is the array of tacit and explicit information about the form of a company's relationships with its local agents (customers).Structural capital is a set of useful elements that aid in the development of intellectual capital, such as structure, processes, information technology, skills, community, empowerment, and service quality.Since it offers the mechanisms and architecture for maintaining, packaging, reinforcing, and moving expertise through business operations, structural capital can be thought of as an organization's supporting structure and adhesive (Cabrita&Bontis, 2008).

Scholars such as Cabrita and Bontis (2008) study on Portuguese banks. It also calculated intellectual capital using individual, relational, and institutional capital, but with a limited number of products. However, there is a paucity of

literature on intellectual capital and sustainable competitive advantage in deposit money banks in the South-South States, which motivated this analysis on intellectual capital and sustainable competitive advantage in deposit money banks in the South-South States using human, relational, and structural capital and organizational responsiveness, as well as the use of structural equation modeling to evaluate the correlation (AkwaIbom, Bayelsa, Cross Rivers, Delta, Edo & Rivers State) Nigeria.

1.1. Statement of the Problem

The Nigerian Banking Industry, which is characterized by intense competition, high technical innovation, responsiveness, lower switching costs, powerful customers with diverse requirements, and continuous regulatory policies, among other factors, requires a sustainable competitive advantage(Uzoamaka, Anigbogu&Chidimma, 2017).To become more efficient and agile to meet customers' desired standard, all organisations, including the service sector, are struggling to meet the tough and new competitive expectations in speed, quality, reliability, and increased market share. This is due to the rapid changes in consumer desires, choices, tastes, and perception. However, as the market climate has changed, some banks have become casualties of their rivals, with some being forced to lay off employees or reduce the number of branches as a result of the intense rivalry, and others being absorbed by others.

An increasingly complex regulatory climate, operational challenges and costs, and struggles with maintaining a sustainable growth rate, stakeholder aspirations, and market share are all putting pressure on the banking industry (Ibhiedu&Asikhia, 2019). With increasing competition and more personal finance options available to customers, banks are being challenged with the reality that customers shift their focus to simple to use and access when making their banking decisions, and the traditional branch-based method or model is rapidly becoming outdated and obsolete, and banks are now required to take this into account when building their strategic plans, acting rapid acquisition of deep skills and realizing the importance of these changes remains the first challenge (McKinsey & Company, 2018). Furthermore, with the increased pressure on new customer acquisition and the race for deposits across the industry in Nigeria, banks must now be more creative in their acquisition strategies, relying on a mix of conventional, electronic, and social media to achieve a substantial return on their investment and increase their market share.

As a result, the aim of this study is to investigate empirically the relationship between intellectual capital and long-term competitive advantage of deposit money banks in Nigeria's South-South States, using human, relational, and systemic capital as intellectual capital dimensions and organizational responsiveness as a measure of long-term competitive advantage.

1.2. Aim and Objectives of the Study

The aim of the study is to determine the relationship between intellectual capital and sustainable competitive advantage of Deposit Money Banks in South-South Nigeria. Thus, the following specific objectives are stated as:

- To examine the relationship between human capital (HC) and organizational responsiveness (OR) of Deposit Money Banks in South-South, Nigeria.
- To investigate the relationship between relational capital (RC) and organizational responsiveness (OR) of Deposit Money Banks in South-South, Nigeria.
- To evaluate the relationship between structural capital (SC) and organizational responsiveness (OR) of Deposit Money Banks in South-South, Nigeria

1.3. Research Hypothesis

- Ho_1: There is no significant relationship between human capital and organizational responsiveness of Deposit Money Banks in South-South, Nigeria.
- H_{02}: There is no significant relationship between relational capital and organizational responsiveness of Deposit Money Banks in South-South, Nigeria.
- H_{03}: Structural capital does not relate with organizational responsiveness of Deposit Money Banks in South-South, Nigeria.

2. Concept of Intellectual Capital

The intellectual capital is a new prominent concept which is based on the premise that, in the contemporary circumstances, intangible assets not disclosed in the financial statements are very important for the firm's operations, since they can significantly increase the value of assets or the current market price of the firm (Kolakovic, 2003).

The concept of intellectual capital (IC) and intangible assets are being used interchangeably. Intellectual properties, according to Peppard and Rylander (2001), provide a context for how they interact in value development. According to Mavridis, intangible assets have the ability to create profit for the company (2005). According to Edvinsson and Malone (1997), expertise, facts, and experience are used to build value for a company.

The effect of Intellectual Capital on the Financial Performance of Listed Nigerian Oil Marketing Companies was investigated by Oyedokun and Saidu (2018). The research took place over a ten-year period, from 2007 to 2016.The market to book value ratio (MB), Value Added intellectual coefficient (VAIC), and monetary model of Tobin's Q (MMQR) were used to calculate intellectual capital, while return on asset was used to measure financial efficiency (ROA).The data was derived from the firms' financial statements using an ex-post facto analysis design. The effect of intellectual capital on financial results was studied using multiple regression analysis. Market to book value has a negative major effect on

return on asset, according to the findings.The Q Tobin's monetary model has no effect on return on asset, and the Value added intellectual coefficient has no effect on return on asset as well.

2.1. Concept of Human Capital

Human capital is the basic component in the intellectual capital development process (Yang & Lin, 2009). It is inherent in people and hence cannot be directly owned by an organization (Edvinson& Malone, 1997). Human capital includes technical skill, employee engagement, and leadership abilities, and refers to what workers contribute to value-adding processes (Halim, 2010). Human capital, according to Kavida and Sivakumar (2009), is the amount of an employee's expertise, talents, experience, education, and attitude toward life and company. Various competencies such as learning and education, experience and expertise, creativity, staff attitude as well as recruitment and training plays animportant contribution to the growth of human capital(Lings &Greenley, 2005; Sharabati*et al.,* 2010; Subramaniam&Youndt, 2005).Employees who are informed, skilled, qualified, innovative, and inspired, for example, will work more effectively and thus create organizational resources.

Hsu (2007) found that the human resource of an organization can improves its performance and as a result, improve the team's results of organization. Human capital, according to study, is one of the main factors that influence performance and shareholder wealth (Coff, 1997; Carpenter et al., 2001; Hitt et al., 2001; Astebro& Bernhardt, 2005). Pablos (2003) showed that human capital is an integral part in terms of human capital an important source of efficiency, effectiveness, and competitive advantage for firms. Carpenter et al., (2001) found similar results and showed the significant role of human capital in value creation.

2.2. Concept of Relational Capital

Relational capital is derived from an organization's interactions with clients, partners, shareholders, and other stakeholders that are vital to its success (Bontis, Crossan&Hulland, 2002).Relational capital, according to Shih, Chang, and Lin (2010), is described as the relationship between organizations, consumers, suppliers, contractors, and other associated partners. Relational capital, according to Low (2000), is the transfer of information from an entity to the outside world.Customer relationship competencies, as well as customer loyalty and trust, play an important role in the growth of relational resources (Isaac, Herremans& Kline, 2010; Sharabati et al., 2010). For instance, higher the degree of customer loyalty and trust, better will be the relationship with customers which subsequently enhances organizational value.

2.3. Concept of Structural Capital

The process and function of a company that helps to enable workers for optimal intellectual success is referred to as structural capital (Bollen, Vergauwen&Schnieders, 2005). Edvinson and Malone (1997) described structural capital as an organization's non-human information storehouses that are embedded in processes, databases, and programs. Furthermore, Bontis et al., (2002) stated that if an organization's procedures were weak, a person could never achieve the full potential of its structures. The outcome of structures and programs, information technology, community, and renewal and growth that substantially contribute to the development of structural capital size is known as structural capital (Choudhary, 2010; Isaac, Herremans& Kline, 2010; Sharabati et al., 2010).Well-defined processes, programs, systems, and information technology, for example, improve employee productivity and can improve customer relations, thus increasing organizational value.

2.4. Concept of Sustainable Competitive Advantage

When Day was explaining competitive advantage preservation tactics in 1984, he introduced the idea of sustainable competitive advantage (SCA).Porter coined the word "sustainable competitive advantage" in 1985 to describe a number of competitive tactics (cost leadership, differentiation, and focus) that can be used to achieve long-term competitive advantage. Porter did not, however, have a formal description for long-term competitive advantage.The closest concept of sustainable competitive advantage, according to Barney (1991), is the durability of benefits and the implementation of specific value development techniques asynchronously with future rivals who are unable to copy those benefits.

In a study on the relation between market-orientation as well as a strategic advantage Iranian tractor manufacturing industry by Faryabi, Tajvidi and Tajvidi (2011), the findings revealed that of three variables of the culture of marketing, market intelligence and marketing capabilities; market intelligence has the most influence on the competitive advantage. Besides, of the variables affecting competitive advantage; differentiation strategy and progressive movement have the highest coefficients, pointing to the importance of these variables. It was also noted that there is a positive significant relationship between the market-orientation and the competitive advantage. In fact, based on this study's findings; it can be deduced that the market is one of the main elements of competitive advantage.

2.5. Concept of Organizational Responsiveness

Responsiveness is described as a concept that focuses solely on changing customer needs, and its measurability is determined by the system boundaries and, as a result, the system's customers (Reichhart&Holweg, 2007). The capacity of an organization to react appropriately to its external environment is referred to as organizational responsiveness (Clippinger, 1999).A more radical concept is that responsiveness is the aggressiveness with which a company's business strategy is pursued (Gresov, Haveman, &Oliva, 1993). Konsynski, Bray and Thomas (2007), added that organizational

responsiveness also refers to the inter-individual knowledge exchanges which, in turn influence the organization's ability to react to a changing environment in a particular style.

Wang and Verma (2008) investigated the importance of business strategy and a high-performance work system in illustrating organizational responsiveness to work-life balance issues. We discovered that product leadership business strategy is positively connected to the probability of implementing work-life balance initiatives using linked data for Canadian workplaces and employees. Cost leadership business strategy is negatively related to the adoption of these programs. Moreover, system of high-performance jobs mediates the relationship.

2.6. Theoretical Framework

2.6.1. Resource-based View

This highlights the tools that companies have built to succeed in the marketplace and draws attention to the firm's internal environment as a source of competitive advantage. The emphasis of Hoskisson's account of the evolution of strategic thinking (Hoskisson et al., 1999) during the early strategy development process was on the firm's internal factors.Ansoff (1965) and Chandler (1962), for example, made significant contributions to the development of the Resource-Based View of strategy (Hoskisson et al., 1999).According to Furrer, Thomas, and Goussevskaia (2008), from the 1980s onwards, the emphasis of investigation shifted from the industry's system (e.g., the Structure-Conduct-Performance (SCP) paradigm and the five forces model) to the firm's internal structure, with resources and capabilities (the core elements of the Resource-Based View) (RBV).The resource-based view of strategy (RBV) has since become a prominent competitive advantage theory (Furrer et al., 2008; Hoskisson et al., 1999). The RBV can be traced back to Penrose (1959), who proposed that the organization's resources, as well as how they are deployed and used, are more critical than the industry structure.

2.7. Empirical Review

Seth and Olori (2017) evaluated business strategies and sustainable competitive advantage of banks in Port Harcourt. The respondents comprised of 131 participants drawn from 15 banks in Rivers State. It was revealed that a significant relationship exists between both variables (business strategies and sustainable competitive advantage), For product differentiation strategies and brand reputation, the research recorded a rho = .710, p = 0.000; cost leadership strategy and brand reputation, rho = .548, p = .000; focus/niche strategy and brand reputation, rho = .605, p = .000; product differentiation strategy and customer loyalty, rho = .713, p = .000; cost leadership strategy and customer loyalty, rho = .598, p= .000; focus/niche and customer loyalty, rho = .677, p = .000; organizational culture and SCA and BS, rho = .481, probability level of 0.063> 0.05. This is as a result of seven (7) null hypotheses that were all rejected based on insufficient evidence for acceptance.

Onwumelu and Dialoke (2018) examined the impact of employee development on human capital performance: a study of selected oil service firms in Rivers State, Nigeria. The population of the study was 150, out of which 109 was determine as sample size through the use of Taro Yamane. The statistical chi-square (X 2) value of 59.303 is greater than the X2 tabulated value of 9.49, indicating that training has a positive effect on employee success. Also, employee educational level impact positively on the performance because of the X2 values is 70.862 is superior to the tabulated value of 9.49. It was also found that employee experience level has appreciable positive impact on performance. From the analysis of the hypothesis, it was found out that the statistical chi-square (X2) value of 130.862 is higher than the X2 tabulated value of 9.49. Finally, the recommendations were made that human capital development elements like training and retraining (on the job and the job) should be the focus point of the management. More proactive method of performance management should be adopted. Staff development should be monitored on regular basis so as to know what strategies are to be adopted.

Chukwu, Ugo and Osisioma (2019) evaluated Market data on three proxies of human capital linked to remuneration and staff strength were used to value human capital in Nigerian banks.Financial statement data was derived from the annual reports and accounts of fourteen banks listed on the Nigerian Stock Exchange for the period 2010 to 2014.The outcome of the regression of market price (MV) on human capital variables (NHPE, OSS, PHPE) and the control variable (EPS). The model summary shows that the model has a good fit with an R 2 of 57 per cent, suggesting that the independent variables explain more than 55 per cent of variations in the market price of shares in the banking industry. The model summary shows a p-value less than alpha at 0.01, and a Durbin-Watson statistic of 1.771 which suggests that the problem of autocorrelation is not a serious issue in this study. Just one attribute – the proportion of highly paying workers – had a major impact on the market value of companies, according to the results of a regression of stock price on human capital indicators. The results indicate that the strength of a valuable stock of human capital on a bank's payroll boosts investor trust.To maintain investor trust, banks that are unable to retain a high proportion of highly paying employees in their staff structure can consider combining with other banks. The study has implications for bank remuneration committees, as the proportion of highly compensated workers at the company level affects equity investors' interest.

3. **Methodology**

3.1. Research Design

This study utilized the survey design approach. A survey design examines a sample of a population to provide a quantitative or numeric overview of trends, perceptions, or opinions (Saunders, Lewis &Thornhill, 2009).The choice of

descriptive survey design is made because important aspects of variables of interest concerning deposit money banks (DMBs), particularly Tier One banks, are outlined.

3.2. Population of the Study

The population of this study comprised of a complete listing of deposit money banks in Nigeria, particularly those in South-South, Nigeria, which constitutes the sampling Frame. The sampling units were drawn from the sampling frame which is the list of tier one (1) banks in each of the six (6) South-South states (AkwaIbom, Bayelsa, Cross Rivers, Delta, Edo& Rivers State) of Nigeria. The study population is eight hundred and nineteen (819) representatives of the tier 1 banks focusing on branch, operations and customer relationship managers. According to CBN (2019) cited in Bukola (2019), Nigeria's Tier one (1) banks incudes; Access Bank, First Bank, Guaranty Trust Bank, United Bank for Africa and Zenith Bank. According to the CBN, Tier-1 Capital is simply the regulator's primary indicator of a bank's financial power. It is made up of the most stable forms of financial capital, which are mostly equity. Common stock and retained earnings are examples of tier-1 money.Tier 1 capital is the most trustworthy form of capital.

The choice of these tier one (1) banks is because these banks have total assets of 24.6 trillion naira covering more than half of thetotal market share and seem to be highly competitive (CBN, 2019 cited in Bukola, 2019). Thus, the target population of eight hundred and nineteen representatives of managers becomes the sampling frame.

S/N	Name	Number of Branches in the six south-south states x 3 managers from each branch (Branch, Operations & Customer Relationship Managers)
1	Access Bank	72 x 3 = 216
2	First Bank of Nigeria Limited	70 x 3 = 210
3	Guaranty Trust Bank	31 x 3 = 93
4	United Bank for Africa	60 x 3 = 180
5	Zenith Bank Plc	40 x 3 = 120
	Total	819

Table 1: Population of the Study
Source: Individual Organizations' Desk

This study utilized judgmental sampling to identify the branch managers, operations managers and customer relationship managers, though the use of the list of Banks in each of the six (6) south-south states of Nigeria. Based on the number of managers identified, the probability simple random sampling is used with the aid of random numbers to ensure every single person in the population has equal chance of being selected.

3.3. Sample Size Determination

This study utilized the Krejcie and Morgan's (1970) formula for sample size determination which is thus;

$S=X^2 NP (1-P) \div d^2 (N-1) + X^2 P (1-P)$

Where:

S= required sample size.

X^2 = the table value of chi-square for 1 degree of freedom at the desired, confidence level (3.841), same as (1.96). (1.96)

N= the population size.

P= the population proportion (assumed to be .50 since this would provide the maximum sample size).

d= The degree of accuracy expressed as a proportion (.05).

Since N = 819

$S= [3.841 (819) (0.5) (1-0.5)] \div [0.05^2 (819-1)] + [3.841 (0.5) (1-0.5)]$

$3.841 (819) (0.5) (O.5) \div [0.0025 (818)] + [3.841 (0.5) (0.5)]$

$= 786.44475 \div 2.045 + 0.96025$

$= 786.44475 \div 3.00525$

$= 261.69$

By approximation, S = 262

3.4. Method of Data Analysis

Inferential Statistics were tested using the Structural Equation Modelling (SEM).

The AMOS (Analysis of Moment Structure) was used in this study. AMOS is one of the popular specialized SEM software programs (Byrne, 2001; 2010; 2012).

4. Result and Discussions

A sample size of 262 was determined based on the population of 819, however, a sample size of 262 was adopted, thus 262 copies of the questionnaire were distributed to the target sample. Retrieval of the copies of questionnaire was achieved manually with the researcher, as well as research assistants, visiting, collecting and collating all copies of the questionnaire; unfortunately, 12 copies of the questionnaire were considered as lost given the absence of the units during

the time of questionnaire retrieval, in some cases, due to the inability of the respondents to meet up with the time window stipulated for questionnaire completion. Therefore, the study utilized a representative size of 250 in the analysis.

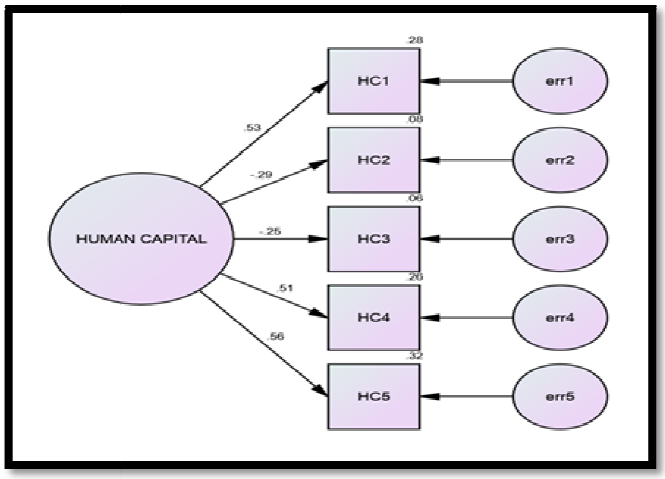

Figure 1: First Order Measurement Model of Human Capital

Model	Chi-Square(df), Significance	NFI	TLI	CFI	RMSEA	Variable	Factor Loading Estimates	Error VAR
Human Capital	(5df) =36.26, P<0.002	1.05	1.03	1.00	0.08	HC1	0.53	0.28
						HC2	-0.29	0.08
						HC3	-0.25	0.06
						HC4	0.51	0.26
						HC5	0.56	0.32

Table 2: First Order Measurement Model Analysis of Human Capital
Source: Amos 24.0 Output on Research Data, 2019

The results of the goodness of fit indices indicated acceptable fit to the data for one-factor model (chi-square (5df) =36.26, p<0.002, RMSEA=0.08, CFI=1.00, NFI=1.05, TLI=1.03). Table 2 summarized the goodness of fit indices, the factor loading estimates and the error variances. Factor loading estimates revealed that the three out of the five indicators were related to latent factor human capital and were statistically significant. According to Brown (2010), completely standardized factor loadings of 0.3 (or 0.4) and above are commonly used to operationally define a "salient" factor loading. The indicators HC1, HC4 and HC5 had factor loadings of 0.53, 0.51and 0.56 respectively and error variances of 0.28, 0.26 and 0.32 respectively. The average variance extracted (AVE) from the construct is 0.28. Thus, AVE=0.28<0.5. Estimated standardized parameters were statistically significant. These parameters are consistent with the position that these are reliable indicators of the construct of human capital.

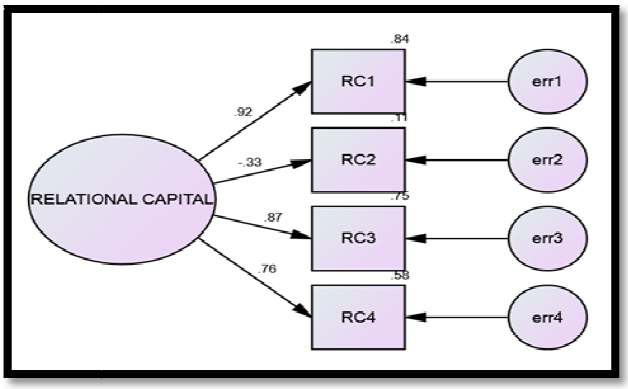

Figure 2: First Order Measurement Model of Relational Capital

Model	Chi-Square(df), Significance	NFI	TLI	CFI	RMSEA	Variable	Factor Loading Estimates	Error VAR
Relational Capital	(2df) =29.18, P<0.000	0.94	0.82	0.94	0.23	RC1	0.92	0.84
						RC2	-0.33	0.11
						RC3	0.87	0.75
						RC4	0.76	0.58

Table 3: First Order Measurement Model Analysis of Relational Capital
Source: Amos 24.0 Output on Research Data, 2019

The results of the goodness of fit indices indicated acceptable fit to the data for one-factor model (chi-square (2df) =29.18, p<0.000, RMSEA=0.23, CFI=0.94, NFI=0.94, TLI=0.82). Table 3 summarized the goodness of fit indices, the factor loading estimates and the error variances. The indicators RC1, RC3 and RC4 had factor loadings of 0.92, 0.87 and 0.76 respectively and error variances of 0.84, 0.75, and 0.58 respectively. The average variance extracted (AVE) from the construct is 0.72. Thus, AVE=0.72>0.5. These parameters are consistent with the position that these are reliable indicators of the construct of relational capital.

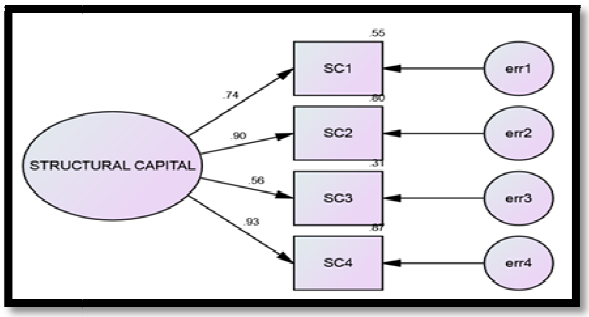

Figure 3: First Order Measurement Model of Structural Capital

Model	Chi-Square(df), Significance	NFI	TLI	CFI	RMSEA	Variable	Factor Loading Estimates	Error VAR
Structural Capital	(2df) =16.80, P<0.000	0.97	0.92	0.97	0.17	SC1	0.74	0.55
						SC2	0.90	0.80
						SC3	0.56	0.31
						SC4	0.93	0.87

Table 4: First Order Measurement Model Analysis of Structural Capital
Source: Amos 24.0 output on research data, 2019

The results of the goodness of fit indices indicated strong model fit to the data for one-factor model (chi-square (2df) =16.80, RMSEA=0.17, CFI=0.97, NFI=0.97, and TLI=0.92). However, the p value, p<0.000 indicated acceptable fit, as the model was over-identified with two degree of freedom. Table 4 summarized the goodness of fit indices, the factor loading estimates and the error variances. Factor loading estimates revealed that the four indicators were strongly related to latent factor structural capital and were statistically significant. The indicators SC1-SC4 had factor loadings of 0.74, 0.90, 0.56 and 0.93 respectively and error variances of 0.55, 0.80, 0.31 and 0.87 respectively. The average variance extracted (AVE) from the construct is 0.64. Thus, AVE=0.64> 0.5. These parameters show that adding a covariance between the error terms for SC1, SC2, SC3 and SC4 improved the fit. These parameters are consistent with the position that these are reliable indicators of the construct of structural capital.

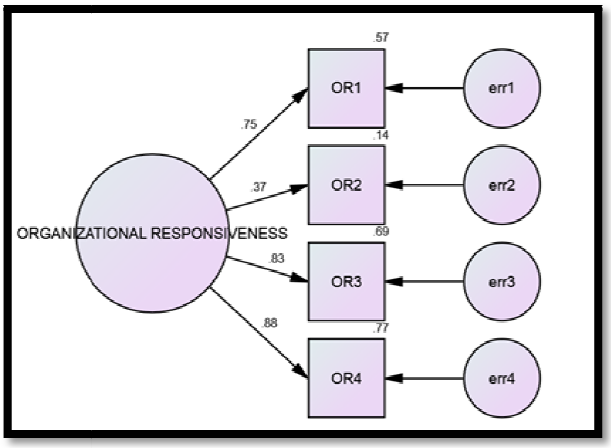

Figure 4: First Order Measurement Model of Organizational Responsiveness

Model	Chi-Square(df), Significance	NFI	TLI	CFI	RMSEA	Variable	Factor Loading Estimates	Error VAR
Organizational Responsiveness	(2df) =66, P<0.000	0.85	0.56	0.85	0.36	OR1	0.75	0.57
						OR2	0.37	0.14
						OR3	0.83	0.69
						OR4	0.88	0.77

Table 5: First Order Measurement Model Analysis of Organizational Responsiveness
Source: Amos 24.0 Output on Research Data, 2019

The results of the goodness of fit indices indicated overidentified fit to the data for one-factor model (chi-square (2df) =66, p<0.000, CFI=0.85, NFI=0.85, TLI=0.56, RMSEA=0.36). Table 5 summarized the goodness of fit indices, the factor loading estimates and the error variances. Factor loading estimates revealed that the four indicators were strongly related to latent factor organizational responsiveness and were statistically significant. The indicators OR1-OR4 had factor loadings of 0.75, 0.37, 0.83 and 0.88 respectively and error variances of 0.57, 0.14, 0.69 and 0.77 respectively. The average variance extracted (AVE) from the construct is 0.55. Thus, AVE=0.5>0.5.

All freely estimated standardized parameters were statistically significant. These parameters are consistent with the position that these are reliable indicators of the construct of organizational responsiveness.

4.1. Test of Hypothesis

S/N	Mediation Stage	Relationship	Std. Beta	Actual Beta	S.E	C.R	P	Remark
1	HC →OR (Hypothesis 1)	Human Capital and Organizational Responsiveness	0.04	0.43	0.35	3.14	0.000	Not supported
2	RC →OR (Hypothesis 2)	Relational Capital and Organizational Responsiveness	0.23	0.54	0.28	2.04	0.000	Not supported
3	SC →OR (Hypothesis 3)	Structural Capital And Organizational Responsiveness	0.60	0.84	0.21	4.21	0.000	Not supported

Table 6: Result of Standardized and Unstandardized Regression Estimate of the Model
Source: Amos 24.0 Output on Research Data, 2019

The hypothesized relationship was postulated in the study; stated in the null form of no relationship. The analysis was based on significance criteria of β>0.3 (Brown, 2015); r>0.7 (Hair, Hult, Ringle&Sarstedt, 2016) and p<0.05.

4.1.1. Hypothesis One

- H_{01}: There is no significant relationship between human capital and organizational responsiveness

Table 6illustrates the analysis for the association between human capital and organizational responsiveness of DMBs in South-South, Nigeria, where β=0.04, r=0.43 and p = 0.000. The findings show a positive and significant association between both variables (where β<0.3, r>0.7 and p < 0.05). Thus, based on the criteria for null hypothetical statement acceptance (β<0.3, r<0.7 and p > 0.05); or rejection (β>0.3, r>0.7 and p < 0.05), the null hypothesis is rejected

and restate that there is a positive significant relationship between human capital and organizational responsiveness of DMBs in South-South, Nigeria. Therefore, Ho1 was not supported.

However, table 6 indicates that human capital has a positive and significantrelationship with organizational responsiveness of deposit money banks in the South-South of Nigeria (β=0.04, r=0.043, p<0.005). Thus, Ho:1 was not supported. The evidence presents human capital as a strong predictor of organizational responsiveness of deposit money banks in South-South of Nigeria. Statistically, it shows that when human capital goes up by 1 standard deviation,organizational responsiveness goes up by 0.04 standard deviation. In other words, when human capital goes up by 1, organizational responsiveness goes up by 0.43. The regression weight for human capital in the prediction of organizational responsiveness is significantly different from zero at the 0.005 level (two-tailed).

This finding aligns with Evans (1986); Schuler and Jackson (1987); Huselid and Becker (1997); Ferguson (2006); Dash and Agrawal, (2013); Schuler and Macmillan (1984) posits that human capital contributes to organizational performance, economic value and competitive advantage by activities such as design and implementation of policies and practices which gives firms edge over rivals.

4.1.2. Hypothesis Two

- H_{02}: There is no significant relationship between relational capital and organizational responsiveness.

Table 6demonstrates the analysis for the association between relational capital and organizational responsiveness of DMBs in Nigeria, where β=0.23, r=0.54 and p = 0.000. The findings show a significant association between both variables (where β≤0.3, r>0.7 and p < 0.05). Thus, based on the criteria for null hypothetical statement acceptance (β<0.3, r<0.7 and p > 0.05); or rejection (β>0.3, r>0.7 and p < 0.05), the null hypothesis is rejected and restate that there is a significant relationship between relational capital and organizational responsiveness of DMBs in Nigeria. Therefore, H_{02} was not supported.

The result shows that there is a positive and significant relationship between relational capital and organizational responsiveness of deposit money banks in South-South, Nigeria. This implies increase in relational capitalis linked to a rise in organizational responsiveness. This position is corroborated by Barney (2002) who observed that RC is valuable, scarce as well as impossible to duplicate and can be used by cooperative enterprise, which can produce a sustainable competitive advantage for the partners. Although one of the partners in the development plan is a useful tool resource, it needs to cooperate with both sides to accept each other's value.

4.1.3. Hypothesis Three

- H_{03}: There is no significant relationship between the structural capital and organizational responsiveness.

Table 6 illustrates the analysis for the association between structural capital and organizational responsiveness of DMBs in Nigeria, where β=0.60, r=0.87 and p = 0.000. The findings show a very positive and significant association between both variables (where β>0.3, r>0.7 and p < 0.05). Thus, based on the criteria for null hypothetical statement acceptance (β<0.3, r<0.7 and p > 0.05); or rejection (β>0.3, r>0.7 and p < 0.05), the null hypothesis is rejected and restate that there is a positive significant relationship between structural capital and organizational responsiveness of DMBs in Nigeria. Therefore, H_{03} was not supported.

The result shows that there is a positive and significant relationship between structural capital and organizational responsiveness of deposit money banks in South-South, Nigeria. This implies increase in structural capital is associated with increase in organizational responsiveness. This finding agrees with Talebi and Bahamir (2012) who found that structural capital presents useful information and knowledge, research and development units to allow employees to have more efficient reaction in condition of uncertainty and risks. It is the overall system and a business's protocols for solve problems and create values (Chang & Lee, 2012).

5. Conclusion

On the basis of its observations and the empirical evidence, this study observed that intellectual capital contributes significantly towards sustainable competitive advantage. The study affirms that human, relational and structural capital, play significant and substantial roles in enabling the organizational responsiveness of deposit money banks in the South-South, Nigeria. The results further substantiate the assertion and lend credit to the position that intellectual capital is a critical and highly imperative factor in sustaining competitive advantage; its role as an antecedent to sustainable competitive advantage is necessitated by the pre-requisites of ideas, creativity, openness to change and confidence in decision-making as fundamental factors in organizations.

5.1. Practical Implications

In view of the findings and the position of this study with regards the relationship between intellectual capital and sustainable competitive advantage of deposit money banks in the South-South of Nigeria, this study recommends as follows:

- Motivational schemes such as (reward good performance, reward employee immediately after tasks are achieved, offer recognition for performance) should be created to induce workers to excel in productivity.
- Regulatory bodies such as the Nigerian Central Bank, Financial Reporting Council of Nigeria, Nigeria Stock Exchange should encourage the inclusion of intellectual capital in the financial reporting of Nigerian Banks.

6. References

i. Ansoff, H. (1965), *Corporate Strategy: an Analytic Approach to Business Policy for Growth and Expansion*, McGraw Hill, New York.
ii. Astebro, T. &Bernhardt, I. (2005). The winner's curse of human capital. *Small Business Economic*, 24(2): 63–78.
iii. Barney, J. (2002). Strategic management from informed conversation to academic discipline. *Academy of Management Executive*, 16(2), 53-57.
iv. Barney, J. (1991). 'Firm resources and sustained competitive advantage', *Journal of Management*, 17(1), 99-120.
v. Bollen, L., Vergauwen, P., &Schnieders, S. (2005). Linking intellectual capital and intellectual property to company performance. *Management Decision*, *43*(9), 1161–1185.
vi. Bontis, N., Crossan, M., &Hulland, J. (2002). Managing an organizational learning system by aligning stocks and flows. *Journal of Management Studies, 39(*4), 439–469.
vii. Bukola, K. (2019). Nigeria's Tier 1 Banks assets hit N24.6trn. Accessed on 09th September, 2019 from https://naija247news.com/2019/04/16/nigerias-tier-1-banks-assets-hit-n24-6trn/.
viii. Byrne, B. M. (2010). S*tructural Equation modeling with Amos*: Basic concepts, applications and programming. Ottawa, Ontairo, Canada: Taylor & Francis Group.
ix. Cabrita, M., &Bontis, N. (2008). Intellectual capital and business performance in the Portuguese banking industry. *International Journal of Technology Management, 43*(1–3), 1–26.
x. Carpenter, M. A., Sanders, W. G., &Gregersen, H. B. (2001). Bundling human capital with organizationalcontext: theimpact of international assignment experience on multinational organizational performance and CEO pay.*Academy of Management Journal*, 44(3): 493–511.
xi. Chandler, A. (1962). *Strategy and Structure*, MIT Press, Cambridge.
xii. Chang, C.M., & Lee, Y. J. (2012). Verification of the Influences of Intellectual Capital upon Organizational Performance of Taiwan-listed Info-Electronics Companies with Capital Structure as the Moderator. The Journal of International Management Studies, 7(1), 80-92.
xiii. Choudhary, J. (2010). Performance impact of intellectual capital: A study of Indian IT sector. *International Journalof Business and Management, 5*(9), 72–80.
xiv. Chukwu, G. J., Ugo, C. C., &Osisioma, B. C. (2019). Market valuation of human capital in Nigerian Banks. *International Journal of Academic Research in Accounting, Finance and Management Sciences,* 8(1), 21-29.
xv. Clippinger, J. (1999). Order from the bottom up: complex adaptive systems and their management. In Clippinger, J. (Ed.), *The Biology of Business: Decoding the Natural Laws of Enterprise* (pp. 1-30). Jossey-Bass, San Francisco, CA.
xvi. Coff, R. (1997). Human assets and management dilemmas:coping with hazards on the road toresource-based theory. *Academy of Management Review*, 22(2): 374–402.
xvii. Coyne, K. P., 1986. Sustainable competitive advantage: What it is, what it isn't. *Business Horizons*, 29(1): 54-61.
xviii. Dash, S. P., & Agrawal, V. (2012). Role of Human Capital Management in Economic Value Addition of Large Scale Organizations: A Literature Review, *International Journal of Financial Management* 2(1), 63-72.
xix. DeNisi, A. S., Hitt, M. A., & Jackson, S. E. (2003). *The Knowledge Based Approach to Sustainable Competitive Advantage.* New York: Oxford University press.
xx. Edvinsson, L. & Malone, M. (1997). *Intellectual Capital*: Realising Your Company's True Value by Finding Its Hidden Brainpower, Harper Collins, New York, NY.
xxi. Evans, P. AL., (1986). The Strategic Outcomes of Human Resource Management. Human Resource Management (1986-1998); *Spring*; 25(1), 149-167.
xxii. Faryabi, M., Tajvidi, R., &Tajvidi, M. (2011). Relationship between market-orientation and competitive advantage in Iranian tractor manufacturing industries group, 5(17): 131-160.
xxiii. Ferguson, K. L. (2006). *Human Resource Management Systems and Firm Performance*. Dissertation, August 2008, University of Louisville, Kentucky.
xxiv. Furrer, O., Thomas, H., &Goussevskaia, A. (2008). 'The structure and evolution of the strategic management field: a content analysis of 26 years of strategic management research', *InternationalJournal of Management Reviews*, 10(1), 1–23.
xxv. Grant, R. (1991). 'The resource-based theory of competitive advantage: implications for strategy formulation', *California Management Review*, 33(3), 114-135.
xxvi. Gresov, C., Haveman, H., &Oliva, T. A. (1993). Organizational Design, Inertia and the Dynamics of Competitive Response. *Organization Science, 4*(2), 181-208.
xxvii. Hair Jr, J. F., Hult, G. T. M., Ringle, C., &Sarstedt, M. (2016). *A primer on partial least squares structural equation modeling (PLS-SEM)*. Sage Publications.
xxviii. Halim, S. (2010). Statistical analysis on the intellectual capital statement. *Journal of Intellectual Capital, 11*(1), 61–73.
xxix. Henderson, B. (1983). The Anatomy of competition. *Journal of Marketing*, 47(3), 7-11.
xxx. Hitt, M. A., Bierman, L., Shimizu, K., &Kochhar, R. (2001). Directand moderating effect of human capitalon strategyand performance in professional firms: a resource-based perspective. *Academy of Management Journal*, 44(1): 13–28.
xxxi. Hoskisson, R. E, Hitt, M. A, Wan, W. P., &Yiu, D. (1999). 'Theory and research in strategic management: swings of a pendulum', *Journal of Management,* 25(3), 417-456.

xxxii. Huselid, M. A., & Becker, B. E.(1997). The Impact of High Performance Work Systems, Implementation Effectiveness, and Alignment with Strategy on Shareholder Wealth. *Academy of Management*. Best Papers Proceedings; 144-148.

xxxiii. Hsu, S. H. (2007). Human capital, organizational learning,network resources and organizationalinnovativeness.*Total Quality Management*, 18(9): 983–998.

xxxiv. Ibhiedu, A. O., &Asikhia, O. (2019). Strategic orientation and market share of selected deposit money banks in Lagos State, Nigeria. *Global Scientific Journals*, 7(3), 517-530.

xxxv. Isaac, R., Herremans, I., & Kline, T. (2010). Intellectual capital management enablers: A structural equation modeling analysis. *Journal of Business Ethics, 93*(3), 373–391.

xxxvi. Kavida, V., &Sivakumar (2009). Intellectual capital: A strategic management perspective. *The IUP Journal of KnowledgeManagement, 7*(6), 55–69.

xxxvii. Kolaković, M. (2003). Teorijaintelektualnogkapitala. Ekonomskipregled, 54(11-12), 925-944.

xxxviii. Konsynski, B., Bray, D. A., & Thomas, D. (2007). *IS-Driven Organizational Responsiveness.* Retrieved from http://ssrn.com/abstract=984598.

xxxix. Krejcie, R. V. and Morgan, D. W. (1970). Determining sample size for Research Activities. *Educational and Psychological Measurement*, 30(6), 607-610.

xl. Kuratko, D., Goodale, J. & Hornsby, J. (2001). "Quality practices for a competitive advantage in smaller firms", *Journal of Small Business Management*, 39(4), 293-311.

xli. Lings, I., &Greenley, G. (2005). Measuring internal market orientation. *Journal of Service Research, 7*(3), 290–305.

xlii. Low, J. (2000). The value creation index. *Journal of Intellectual Capital*, *1*(3), 252–262.

xliii. Markides, C.,& Wang, P. (2000). Strategy and management: constantinosmarkides discuss strategic innovation". *European Management Journal*, 18(3), 357-366.

xliv. Mavridis, D. G. (2005). Intellectual capital performance drives in Greek banking sector*. Management Research Reviews, 28(5),* 42-62.

xlv. McKinsey & company, (2018). *McKinsey and company*; Retrieved on 12/07/2019 from https/www.mckinsey.com/industries,financial-services/our-our-insights/strategic-choices-for banks-in-the-digital-age.

xlvi. Montgomery, C. A., & Porter, M. E. (2009). *Strategy: Seeking and Securing Competitive Advantage*. The Harvard Business Review, Boston, M. A.

xlvii. Ogujiuba, K. (2013). The Impact of Human Capital Formation on Economic Growth in Nigeria. *Journal of Economics*, 4(2), 121-132.

xlviii. Onwumelu, O. P., &Dialoke, I. (2018). Impact of Human capital development on employee performance: a study of selected oil service firms in Rivers State, Nigeria. *International Journal of Social Sciences and Management Research*, 4(3), 56-69.

xlix. Oyedokun, G. E., &Saidu, B. (2018). Impact of Intellectual Capital on Financial Performance of Listed Nigerian Oil Marketing Companies. *Information and Knowledge Management*, 8(9), 13-27

l. Pablos, P. (2003). Intellectual capital reporting in Spain: A comparative view. *Journal of Intellectual Capital*, *4* (1), 61–81.

li. Penrose, E. T. (1959). *The Theory of Growth of the Firm*, Blackwell, Oxford.

lii. Peppard, J., &Rylander, A. (2001). Leveraging intellectual capital at APiON. Journal *of Intellectual Capital, 2(3)*, 225–235.

liii. Peteraf, M. A. (1993). 'The cornerstones of competitive advantage: a resource-based view', *StrategicManagement Journal,* 14(3), 179-192.

liv. Porter, M. E. (1985). *Competitive Advantage: Creating and Sustaining Superior Performance*, Free Press, New York.

lv. Prahalad, C. K. & Hamel, G. (1990). 'The core competence of the corporation',*Harvard BusinessReview*, 68(3), 79-91.

lvi. Reichhart, A., &Holweg, M. (2007). Creating the customer-responsive supply chain: a reconciliation of concepts'. *International Journal of Operations & Production Management, 27*(11), 1144-1172.

lvii. Rodríguez-Castellanos, A., García-Merino, J. D., & García-Zambrano, L. (2010). "*Conocimiento organizacional, recursos intangibles y resultados empresariales*". In Maximsev, I. A., Krasnoproshin, V. V. and Prado-Román, C. (Eds.): Global Financial & Business Networks and Information Management Systems. Madrid: European Academic Publishers, pp. 23-42 (CD format).

lviii. Saunders, M., Lewis, P., &Thornhill, A. (2009).*Research Methods for Business Students*. Pearson, New York.

lix. Schuler, R. S., & Jackson, S. E. (1987). Linking Competitive Strategies with Human Resource Management Practices. *The Academy of Management Executive* (1987-1989), 1(3) (Aug., 1987), 207-219.

lx. Schuler, R. S. & MacMillan, I. C. (1984). Gaining Competitive Advantage through Human Resource Management Practices. Human Resource Management (pre-1986); *Fall*; 23(3), 241-254.

lxi. Seth, O. C., &Olori, W. O. (2017). Business Strategies and Sustainable Competitive Advantage of Banks in Port Harcourt. *International Journal of Advanced Academic Research, Social & Management Sciences*, 3(11), 28-52

lxii. Sharabati, A., Jawad, S., &Bontis, N. (2010). Intellectual capital and business performance in the pharmaceutical sector of Jordan. *Management Decision*, *48*(1), 105–131.

lxiii. Shih, K., Chang, C., & Lin, B. (2010). Assessing knowledge creation and intellectual capital in banking industry. *Journal of Intellectual Capital, 11*(1), 74–89.
lxiv. Subramaniam, M., &Youndt, M. (2005). The influence of intellectual capital on the types of innovative capabilities. *Academy of Management Journal, 48*(3), 450–463.
lxv. Talebi, K., &Bahamir, F. (2012). Identification of Intellectual Capital Effects on Promoting Organizational Entrepreneurship (Charmahale-E Bakhtriari Ministry of Cooperatives, Labour and Social Welfare). *ZENITH International Journal of Business Economics & Management Research*, 2(6), 37-48.
lxvi. Uzoamaka, N. P., Anigbogu, T., &Chidimma, I. J. (2017). Competitive intelligence and organizational performance in selected deposit money banks in South-East, Nigeria. *International Journal of Trend in Scientific Research and Development*, 1(6), 105-122.
lxvii. Vinayan, G., Jayashree, S., &Marthandan, G. (2012). Critical Success Factors of Sustainable Competitive Advantage: A study in Malaysian Manufacturing Industries. *International Journal of Business and Management*, 7(22), 29-45.
lxviii. Wang, J., &Verma, A. (2008). Explaining organizational responsiveness to work-life balance issues: the role of business strategy and high-performance work system. *Personnel Psychology*, 60(2), 20-35.
lxix. Winter, S. G. (2003). Understanding dynamic capabilities. *Strategic Management Journal*, 24(2), 991-995.
lxx. Yang, C., & Lin, C. (2009). Does intellectual capital mediate the relationship between HRM and organizational performance? Perspective of a healthcare industry in Taiwan. *The International Journal of Human Resource Management*, *2*(9), 1965–1984.